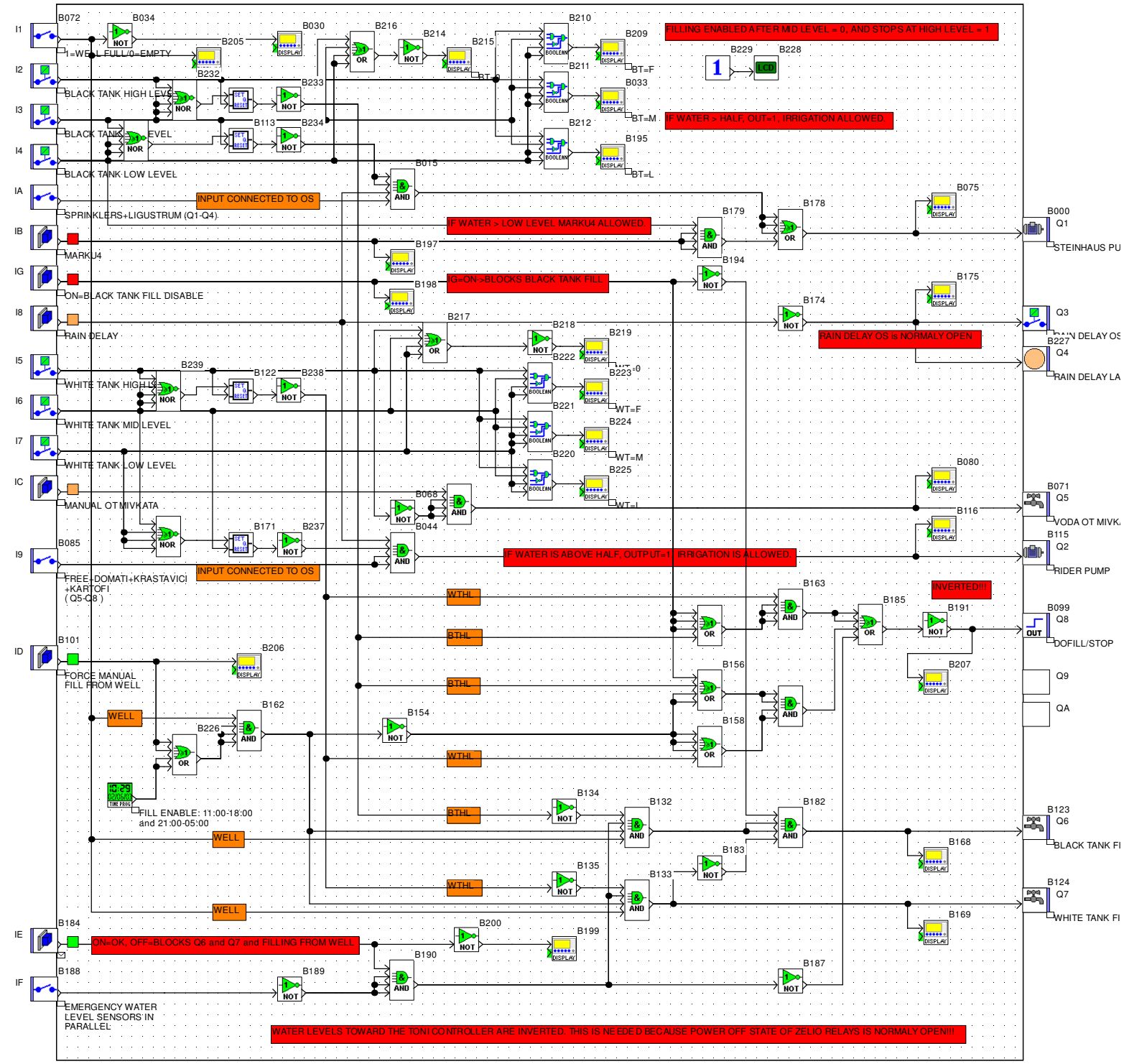Program diagram